Type L6J Load Cell

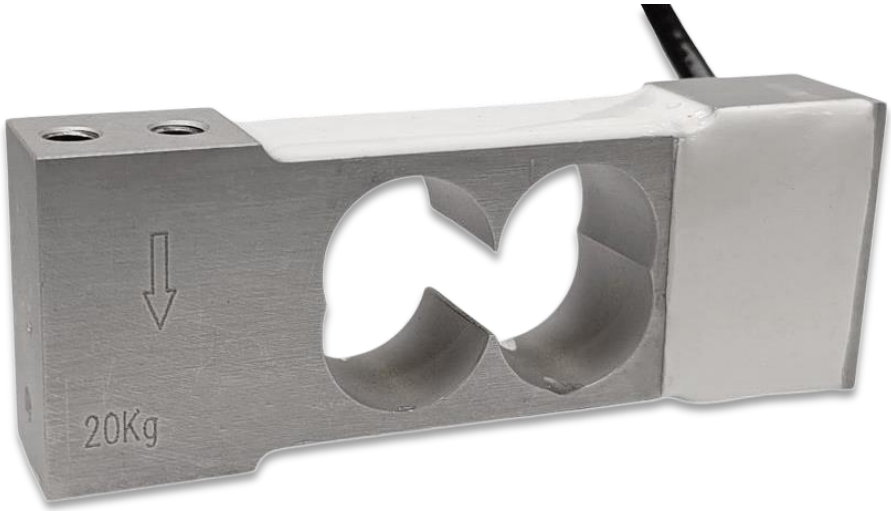

Short Description

Non-OIML approved

- Aluminium-alloy IP65 single point load cell
- Colourless anodized
- Suitable for single or double load cell structured platform scales
- Recommended maximum platform size: 200 × 200 mm

Available Models

Capacity	Accuracy	Full Article Description
1kg	C3D	L6J-C3D-1kg-0.45B
2kg	C3D	L6J-C3D-2kg-0.45B
3kg	C3D	L6J-C3D-3kg-0.45B
5kg	C3D	L6J-C3D-5kg-0.45B
8kg	C3D	L6J-C3D-8kg-0.45B
15kg	C3D	L6J-C3D-15kg-0.45B
20kg	C3D	L6J-C3D-20kg-0.45B

Specifications and dimensions are subject to change without notice and do not constitute any liability whatsoever.

We believe we make you stronger!

Zemic Europe B.V.
T: +31 76 50 39480
info@zemic.nl
www.zemiceurope.com

Technical Specifications L6J

Accuracy Class		C3D
Output Sensitivity (= FS)	mV/V	1.5 ± 0.2
Maximum Capacity (E_{max})	kg	1, 2, 3, 5, 8, 15, 20
Max. Number of Load Cell Intervals	n_{LC}	2500
Ratio of min. LC Verification Interval	$Y = E_{max} / v_{min}$	5000
Combined Error	%FS	≤± 0.028
Creep Error (30 minutes)	%FS	≤± 0.030
Temperature Effect on Zero (ZTC)	%FS/10°C	≤± 0.028
Temperature Effect on Sensitivity (STC)	%FS/10°C	≤± 0.028
Zero Balance	%FS	≤± 2.0
Safe Overload	%FS	150
Ultimate Overload	%FS	300
Maximum Deflection	mm	0.25 ~ 0.30
Eccentric Loading Error	%Ld/cm	± 0.002
Excitation, Recommended Voltage	V	5 ~ 12
Excitation, Maximum Voltage	V	18
Input Resistance	Ω	409 ± 6
Output Resistance	Ω	350 ± 3
Insulation Resistance (50V)	MΩ	≥5000
Compensated Temperature	°C	-10 ~ + 40
Operating Temperature	°C	-35 ~ + 65
Storage Temperature	°C	-40 ~ + 70
Load Cell Weight	kg	~0.08
Element Material		Aluminium
Ingress Protection (acc. to EN 60529)		IP65
Recommended Torque on Fixation Bolts	Nm	M5: 7

Wiring

Features:

Cable type: Shielded, 4-conductor cable , conductor AWG 26
Cable diameter: Ø 3.8mm
Cable length: 0.45m ± 0.05m
Cable jacket: PVC
Shield not connected to element

4-Wire Connection Diagram

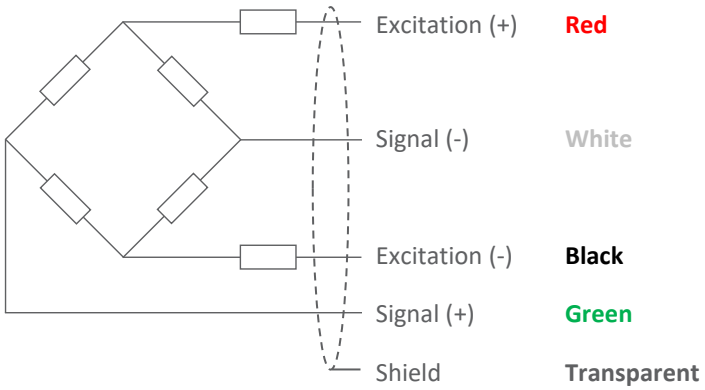

Specifications and dimensions are subject to change without notice and do not constitute any liability whatsoever.

We believe we make you stronger!

Zemic Europe B.V.
T: +31 76 50 39480
info@zemic.nl
www.zemiceurope.com

Dimensions in mm

Front View

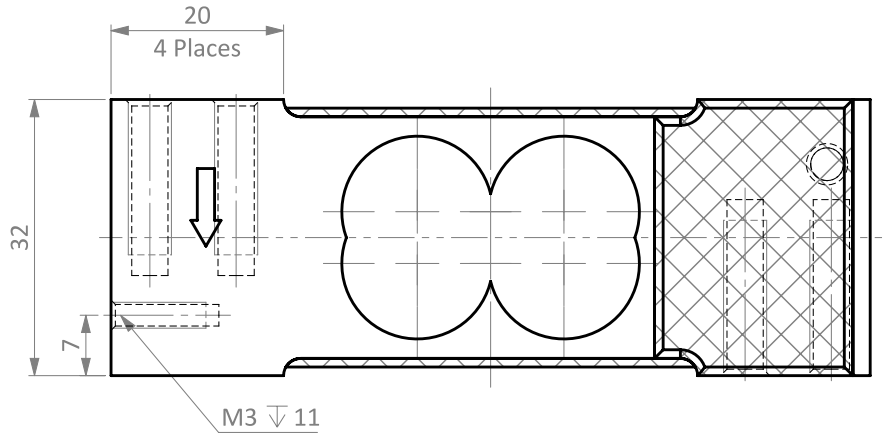

Top View

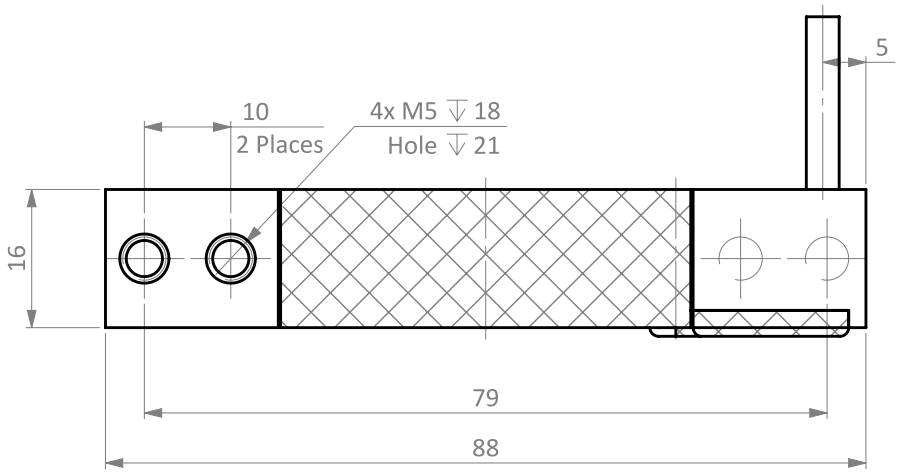

Side View

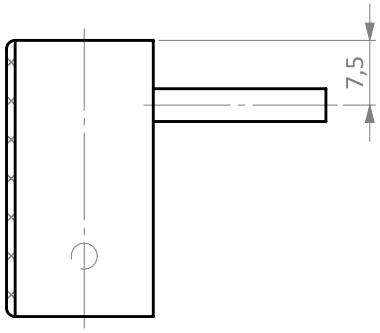

Isometric View

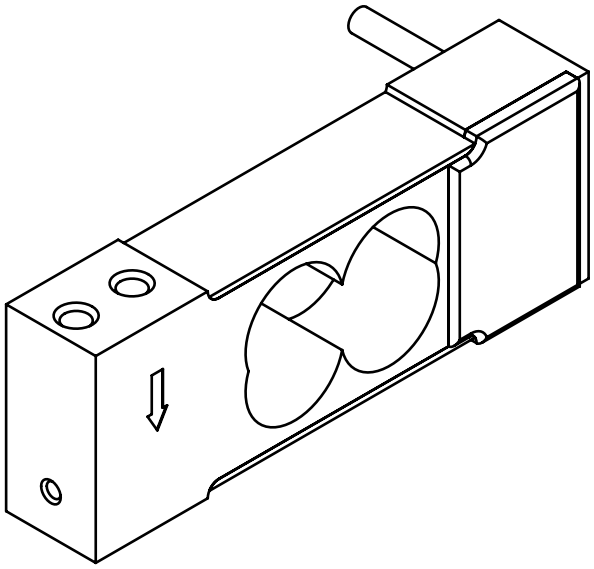

Specifications and dimensions are subject to change without notice and do not constitute any liability whatsoever.

We believe we make you stronger!

Zemic Europe B.V.
T: +31 76 50 39480
info@zemic.nl
www.zemiceurope.com